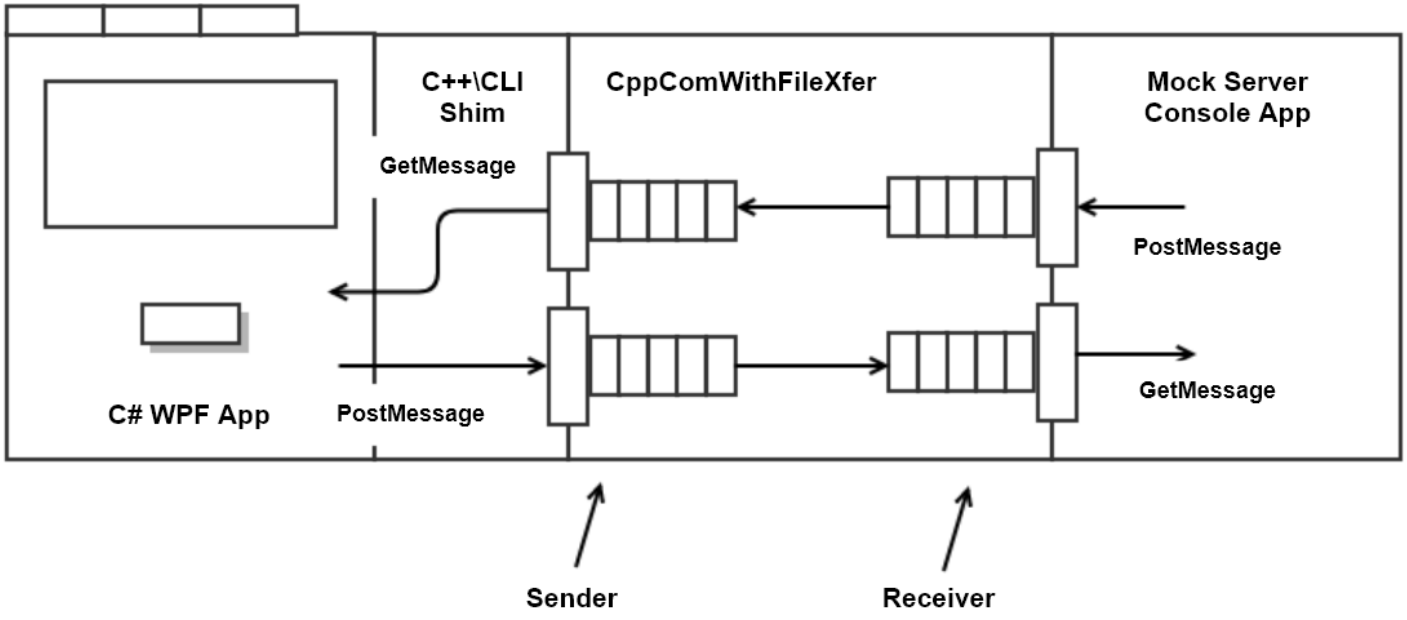

Proposed Project #3 Structure